Print Phase – 1

All files are in this drive folder: Phase_1_Files

***The print orientation is shown in pictures. If the parts fail to print in that orientation, you may change the orientation.

1. Base

file Name: Base.STL
Link: base.stl
Infill: 20%
Color: White
Precision (Flowrate): Medium (Medium)
Material: PETG
Quantity: 1

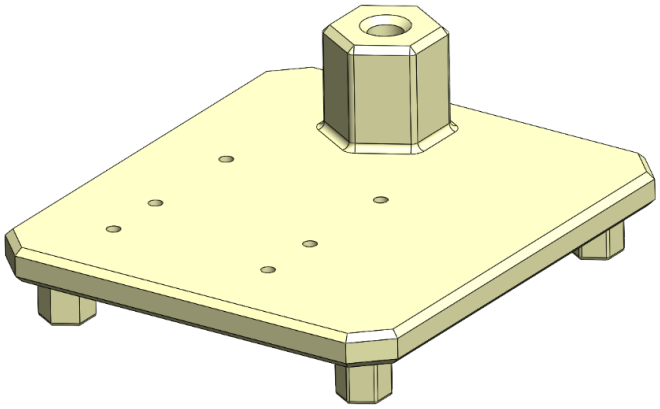

2. Size Adjustor

file Name: SizeAdjustor.STL
Link: SizeAdjustor
Infill: 20%
Color: White
Precision (Flowrate): Medium (Medium)
Material: PETG
Quantity: 1

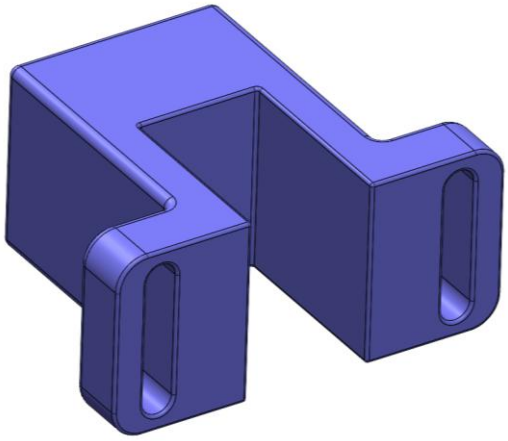

3. Blade Housing

file Name: bladeHousing.STL
Link: bladeHousing
Infill: 50%
Color: White
Precision (Flowrate): High (Low)
Material: PETG
Quantity: 1

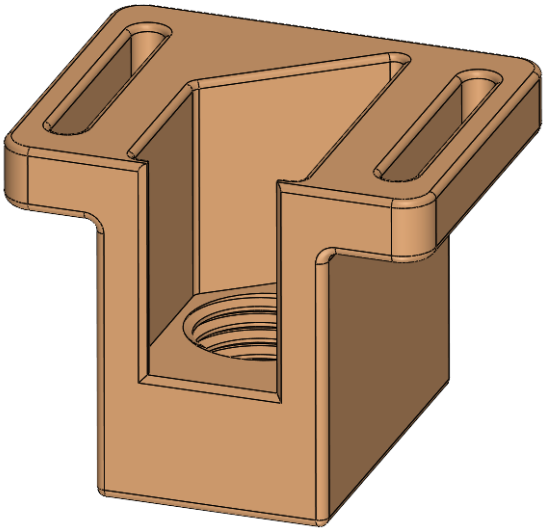

4. Height Adjustment Screws

file Name: heightAdjustmentScrews.STL
Link: Height Adjustment Screw
Infill: 100%
Color: White
Precision (Flowrate): High (Low)
Material: PETG
Quantity: 1

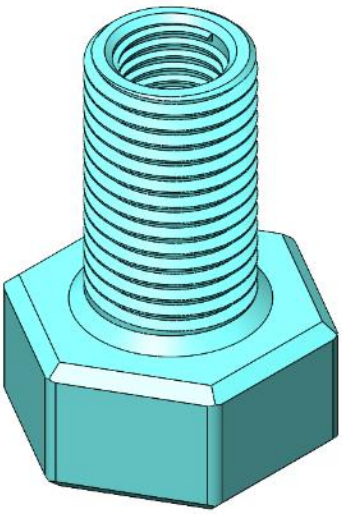

5. Blade Holder
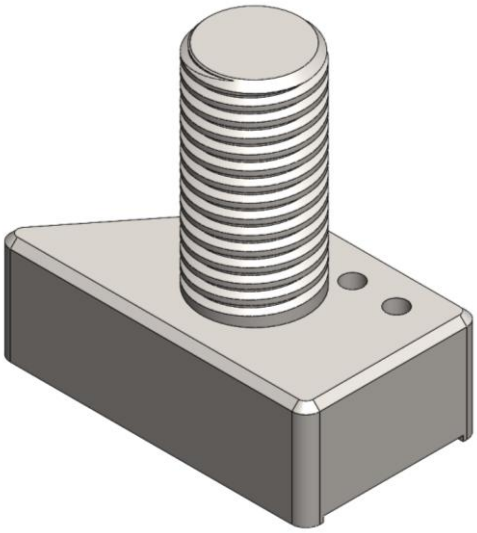
file Name: bladeHolder.STL
Link: Blade Holder
Infill: 100%
Color: White
Precision (Flowrate): High (Low)
Material: PETG
Quantity: 1